activity four

The Effects of Aircraft and Space Flight on the Human Vestibular System

THE NASA BARANY CHAIR

OBJECTIVE

To investigate the effects of disorientation on the human body during flight in the atmosphere or in space.

CREDITS

The National Aeronautics & Space Administration has an outstanding selection of educational products for AEOs and teachers. Quite a large number of these products involve hands-on activities that make concepts more easily understood. This is one of those activities. For more detailed references, the author urges the senior member to carefully read all of the **"Educational Brief, The Effects of Space Flight on the Human Vestibular System"** provided here by NASA.

The senior member is **STRONGLY** urged to read about the effects of disorientation and why induced vertigo can make the person in the Barany Chair sick. This is an activity that has been used for years by the FAA and other aeromedical agencies *to show pilots how* easily disorientation can happen.

SENIOR MEMBERS MUST BE RESPONSIBLE AND NOT ALLOW CADETS, OR EVEN OTHER SENIORS, TO USE THIS AS A TOY. EXPERIMENTS SHOULD BE CONDUCTED IN A CAREFULLY PLANNED *ENVIRONMENT.*

BACKGROUND

The presence of sensory and response systems is a universal attribute of life as we know it. All living organisms on Earth have the ability to sense and respond appropriately to changes in their internal and external environment. Organisms, including humans, must sense accurately before they can react, thus ensuring survival. If our senses are not providing us with reliable information, we may take an action which is inappropriate for the circumstances and this could lead to injury or death. **An example of this could be a pilot whose body is telling him/her one thing and the actual situation is totally different. Consider the fact that the pilot thinks he/she is going one direction in a turn and the *airplane is going another. The pilot corrects* thus creating a deadly tight spiral!**

How Many Senses - We are all familiar with the questions, " How many senses do humans have?" The answer most often is "5"; i.e., sight, taste, smell, hearing and touch. Actually, there are many more senses.

One of the most powerful senses is the vestibular sense provided by the **vestibular system.** *It is our ability to sense body movement combined with our ability to maintain equilibrium.* The human body has a remarkable ability to sense and determine the direction and the speed in which it is moving. This in turn helps us maintain postural equilibrium.

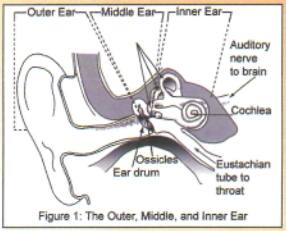

Figure 1: The Outer, Middle, and Inner Ear

In reference to Figure 1, the ear is made up of several smaller structures that can be organized into three distinct anatomical regions: an outer ear which extends from outside the body through the ear canal to the tympanic membrane (ear drum); a middle ear, an air-filled cavity containing three tiny bones (ossicles) that transmit and amplify sound between the ear drum and the cochlea (where the sense of hearing is located; and the inner ear, composed of the cochlea and the vestibular system.

Human beings have the ability to walk a tight rope, do repeated pirouettes in a ballet, combine twists and turns when diving, fast, tight spins on ice skates, all without (usually) losing balance. This ability of never losing track of the relative position of arms and legs with respect of the rest of the body is utterly magnificent!

How does the human body sense and control the movement so precisely? How do we maintain balance while putting ourselves through a wide variety of spinning and tumbling activities that are inherently "unbalancing?" When we are in motion, how do we know in what direction and at what speed we are moving? How do these important body senses change or adapt when we fly in an aircraft or enter the microgravity environment of low Earth orbit? **Can these sensory and response systems, which work so well here on Earth, provide us with inaccurate and potentially harmful information when we fly as pilots or astronauts?**

The answer is YES and that's what this activity is all about.

Maintaining postural equilibrium, sensing movement, and maintaining an awareness of the relative location of our body parts requires the precise integration of several of the body's sensory and response systems including visual, **vestibular, somatosensory (touch, pressure, and stretch receptors in our skin, muscles, and joints) and auditory. Acting together, these body systems constantly gather and interpret sensory information from all over the body and usually allow us to act on that information in an appropriate and helpful way.**

Body movements undertaken in our everyday "Earth-normal" environment usually do not upset our sense of balance or body orientation. However, we have all experienced dizziness and difficulty walking after spinning around in a circle. How does the unique gravitational condition encountered in space flight affect an astronaut's sense of body orientation movement, and/or balance?

Astronauts experience similar sensations of dizziness and disorientation during their first few days in space. Upon returning to Earth after prolonged exposure to microgravity, astronauts frequently have difficulty standing and walking upright, stabilizing their gate, and walking or turning corners in a coordinated manner. An astronaut's sense of balance and body orientation takes time to re-adapt to Earth-normal conditions.

Something about the vestibular system obviously adapts to changing conditions, but what? Why? How? Might a better understanding of this microgravity-induced vestibular function help people back on Earth prevent the dizziness, disorientation, and susceptibility to falling that some older people experience? Answers to these important and interesting questions can be found by first by having a better understanding of the human vestibular system.

AT THIS POINT, THE SENIOR MEMBER IS ASKED TO READ THE NASA EDUCATIONAL BRIEF "The Effects of Space Flight on the Human Vestibular System." (To find this information, go to http://www.weboflife.nasa.gov/ . START WITH "THINGS TO KNOW, VESTIBULAR ANATOMY & PHYSIOLOGY." **WE ARE GOING TO PUT THIS KNOWLEDGE INTO PRACTICE BY BUILDING A NASA BARANY CHAIR.**

NATIONAL SCIENCE STANDARDS

Content Standard B: Physical Science
- Motions and forces

Content Standard C: Life Science
- Behavior of organisms

Content Standard G: History and Nature of Science
- Science as a human endeavor

Unifying Concepts and Processes
- Evidence, models, and explanation

Using The Barany Chair

The following activity uses a chair that has such a smooth friction-free motion that a person sitting in the chair hardly senses there is any rotation. The chair is designed to rotate in one plane, right or left. If built properly, the Barany Chair is capable of isolating the vestibular sense so that motion is interpreted solely on the basis of vestibular feedback. Four *powerful vestibular illusions (spatial disorientation* phenomena) can be performed in the squadron or in a classroom setting. The illusions provide a fun, hands-on opportunity to demonstrate the physiology of the semicircular canals.

In this experiment, the volunteer has his/her eyes closed (a blindfold works well) and the hands are resting on the armrests of the chair with the thumbs pointed upward. The subject is rotated slowly in either direction, right or left. The subject is told to indicate the direction of rotation by pointing the thumbs. The area surrounding the subject should be very quiet so there is not a reference for direction. The chair is allowed to slow to a stop and the observers are asked to notice what happens. The subject in the chair will most likely give an indication that he/she is rotating in the opposite direction while standing perfectly still. If the blindfold is removed, or the subject is asked to open his/her eyes, he/she will be astonished to find that they are not rotating at all.

As NASA says in their " Effects of Space Flight…" brief, " the test subject should falsely sense motion when none is taking place, perceive motion in a different direction than that which is actually taking place or fail to detect motion at all."

Building The Barany Chair

This photograph shows the materials used by the author and Capt. Ryan Kubicek, former DAE for the Colorado Wing. From left to right you have wood stain and a paint brush for application to the base. Next is a threaded steel rod that was substituted for the pipe nipple shown in the NASA instructions. The hex nuts and hex bolts are part of the attachment assembly for the pipe nipple (rod) and the rear axle hub assembly seen on the right. The white PVC piece is the rigid coupling used between the hub and the mounting chair bracket. The hex bolts, washers and nuts are for attaching the hub to the base "pedestal."

Look at these parts and then study the "Barany Chair Bearing Mechanism" and the "Barany Chair Assembly." Once you see where they are used, it will become quite clear how the hardware is used.

The following is an excerpt from the NASA brief on construction of the Barany Chair. The author and former Colorado Wing DAE, Capt. Ryan Kubicek, changed a few details along the way. The actual construction is shown in the "how-to" images provided here. If a change was made, it is noted in the photo captions.

Barany Chair - Pedestal Construction

Construction Notes

- Be sure to follow all manufacturer instructions for safe operation of tools and use of materials employed in the construction of the Barany Chair.
- The interior square set frame should be constructed from 2"x2" or 2"x4" lumber. The finished size of the pedestal should be 12" wide, 12" deep, and 12" to 15" high depending upon the height of your students. The lengths of the frame pieces you cut will depend upon the size of the wood you use.
- Screw and glue the square set frame together. Be sure to countersink the holes so that the screw heads are flush with the wood. Offset the pilot holes of intersecting screws so that they do not hit each other.
- Face the frame with 3/4" clear pine or plywood. Screw and glue three of the sides but attach the fourth side with screws only. This becomes an access door for tightening bolts.
- The top platform is made from two 3/4" plywood pieces glued together. Before gluing, determine the center of each board. Drill a 2 1/2" hole with a hole saw through the center of the lower board. Drill a 3" hole through the center of the top board. Align them carefully before gluing.
- This design shows 3/16" by 3 1/2" hex bolts used for attaching the pedestal to the base. The bolts extend downward from the pedestal frame into tee-nuts in the base. This permits easy removal of the pedestal from the base. If preferred, the pedestal can be permanently fixed to base with glue and screws.

Materials List

Number	Quantity	Item	Specifications
1	1	wood glue	carpenter grade
2	2	plywood	48"x 48"x 3/4
3	4	lumber	8'x 2"x 4"
1	56	wood screws	#10, 3" phillips
5	4	hex bolts	3/16"x 3 1/2
4	6	cut washer	3/16"

Tools

- Electric hand drill - 3/8" or 1/2"
- Hole saws - 3" and 2 1/2" with drill attachment
- Drill bit for pilot holes
- Countersink bit
- Phillips screwdriver or Phillips drill bit
- Crosscut hand saw
- Ruler
- Carpenter's square

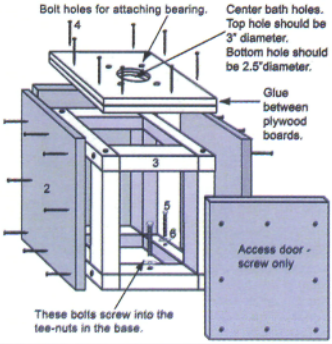

The Effects of Space Flight on the Human Vestibular System

Instead of building a pedestal, we used a milk box and reinforced it with 2 x 4 inch boards.

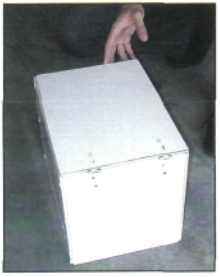

A quality milk box makes an excellent pedestal for the Barany Chair.

To make the pedestal stronger, 2 x 4 boards were press-fitted and nailed inside the box and used for greater strength.

The pressboard is flimsy by itself so it is recommended that the box be reinforced to hold the weight of a person weighing more than 200 pounds.

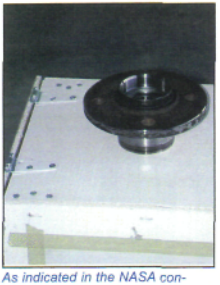

As indicated in the NASA construction, a rear axle hub from an automobile will be needed to carry the weight of the subject and the chair. The bearing inside this hub will have a threaded steel rod positioned inside the inner space. NASA recommends the rear axle hub come from a Nissan Sentra and we found one at a local wrecking yard for $25.

This is the hub with the mounting studs removed. It should be mentioned that the assembly will most likely be grimy and it is recommend that it be cleaned with a quality solvent. If it is clean and in good condition, the bearing will operate silently.

This image shows the hub in position on top of the pedestal. It was mounted as the NASA directions point out. Capt. Kubicek is marking the base for mounting the milk-box pedestal. The only difference between ours and the one in the NASA instruction plan was the use of a square of available plywood.

Barany Chair - Base Construction

Construction Notes

- Be sure to follow all manufacturer instructions for safe operation of tools and use of materials employed in the construction of the Classroom Barany Chair.
- Unfinished wood tabletops are available from hardware and lumber stores.
- Drill four holes in through the top to match the bolt holes in the pedestal. Slip tee nuts into these holes from the bottom of the base. When the bolts from the pedestal are screwed into the nuts, the flange on the nuts will draw the base and the pedestal together snugly.
- Attach rubber feet to the bottom of the pedestal around the rim. Feet are available from hardware stores and come with screws or nails to mount them to the bottom.

Materials List

Number	Quantity	Item	Specifications
1	1	round table top	30" diameter
2	4	tee-nuts	3/16"
3	4	lumber	8'x 2"x4"
4	4	rubber feet	screw or nail type

Tools

- Electric hand drill - 3/8" or 1/2"
- Drill bit for tee-nut holes
- Screwdriver or hammer to attach feet

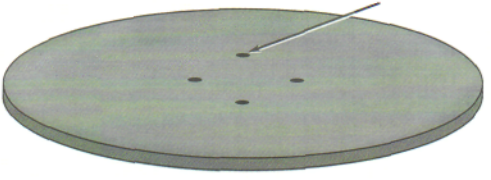

We used an available piece of ¾" plywood cut 30" on each side.

Barany Chair - Bearing Mechanism

Construction Notes

- Be sure to follow all manufacturer instructions for safe operation of tools and use of materials employed in the construction of the Barany Chair.
- Except for the bearing, all metal parts are available from hardware stores.
- The bearing is available from auto parts stores. It is a free-spinning rear axle bearing from a front-wheel drive automobile. The underside of the bearing is tapered, necessitating two different sized holes in the plywood bearing platform.
- The horizontal dashed lines indicate where the mechanism is attached to the seat bracket of the chair and to the plywood platform.
- The rigid coupling comes from hardware electrical departments. It serves as a spacer.
- The galvanized pipe nipple has to be made specially for the Barany Chair. Hardware stores will cut and thread a pipe for you for a small charge. Before specifying the final length and threading, examine the seat bracket of the office chair you are using. You may require a slightly longer or slightly shorter nipple than called for here. The upper end of the nipple will require about 4" of thread while the lower end should require only about 1".

Materials List

Number	Quantity	Item	Specifications
1	3	lock nuts	3/4"galvanized
2	1	pipe nipple	6"x3/4"galvanized
3	1	rigid coupling	1"(to fit 1"conduit)
4	4	hex bolts	5/16"x 2 1/2"
5	1	rear axle hub bearing	BCA hub bearing #512025 (1995 Nissan Sentra)
6	4	lock washers	5/16"
7	4	cut washers	5/16"
8	4	hex nuts	5/16"
9	1	lock nuts	3/4"galvanized

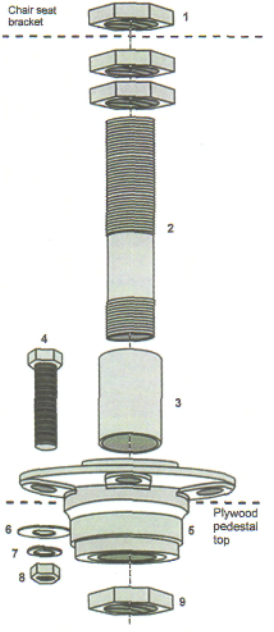

The Effects of Space Flight on the Human Vestibular System

The #2 pipe nipple was substituted with a threaded steel rod. The fasteners for this rod were nylon nuts.

Barany Chair - Assembly

Construction Notes

- Be sure to follow all manufacturer instructions for safe operation of tools and use of materials employed in the construction of the Barany Chair.
- Remove the seat bracket from the bottom of the seat.
- Twist two lock nuts onto the long threaded end of the pipe nipple. Keep them loose and below the point where the bracket will rest.
- Insert the nipple into the seat bracket hole and twist another lock nut on the upper end of the nipple. Tighten the first and the second lock nut to the bottom of the bracket. The two lock nuts working together will resist later loosening.
- Reattach the seat bracket to the seat.
- Slide the other end of the pipe nipple through the spacer and then into the hole of the bearing. (The bearing should already be firmly attached to the wooden pedestal of the Barany Chair.) Make sure the chair rotates freely above the pedestal.
- Reach through the access door of the pedestal and tighten the remaining lock nut onto the lower end of the pipe nipple. The chair should now rotate freely with no wobble. Close the access door.
- Attach the safety lap belt to the back or the rear of the arms of the chair. The Barany Chair is now finished and ready to be used.

Materials List

Quantity	Item	Specifications
1	chair seat	from office chair, non-tilt, with armrest
1	safety lap belt	wide hook-and-loop tape or webbing and buckles, available from an outdoor or sporting goods store

Tools

- Set of wrenches
- Screwdriver

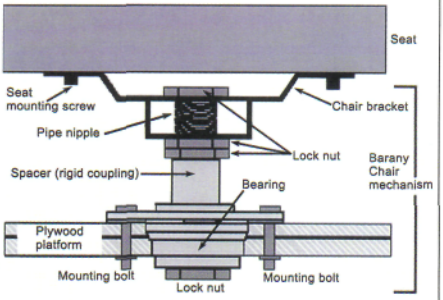

The threaded steel rod was attached to the mounting bracket of the chair as shown here. A PVC tube was used as a "spacer" for the rigid coupling. It is clearly shown in the photograph of the completed assembly.

The white PVC spacer coupling can be seen between the chair bracket and the pedestal. If the threaded rod is mounted correctly, the bearing in the automobile axle hub will provide enough support for the chair and just about any subject. As seen in the cadet demonstration (next photograph), the pedestal and base were painted silver gray. Eventually, the Barany Chair built by the author and Capt. Kubicek, will have a foot rest built into the chair bracket. Once this is installed, the subject can be given a "control stick" The subject then "flies" the chair and moves the stick in the direction of rotation.

A cadet was placed in the Barany chair and Capt. Ryan Kubicek had him close his eyes. The cadet was rotated slowly and his "thumbs up" pointed in the direction of the rotation. As the chair slowed to a stop, he suddenly gave the thumbs up sign that he was going in the opposite direction although he was standing still.

There was no nausea or sickness felt by the cadet; however when he opened his eyes, he was somewhat astonished to find that he was sitting still. This is a clear indication that he was experiencing spatial disorientation.